Sebastian Qaisieh, Andre Seoane, Hailey Crume, Cedrick Zeigler, Benjamin Levy, Aidan Woods

ME 1212 (Dr. Hunter B. Gilbert)

Section 2: Group 02-06

04/19/2026

Reverse Engineering Report: Orbital Sander

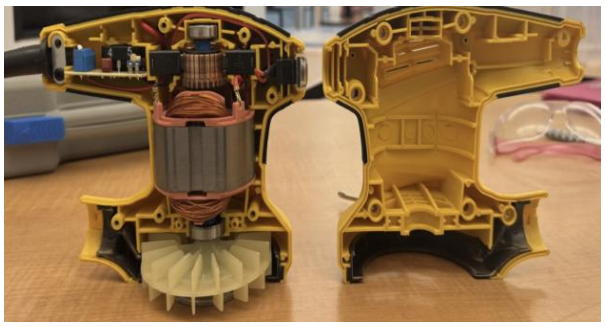

Abstract: (HRC)

This report presents a comprehensive analysis of an orbital sander, with emphasis on the integration between the functional framework and its mechanical components. This was done through a detailed teardown disassembly, in which we developed a functional decomposition tree, studied three primary systems in the sander, and completed CAD modeling in Fusion 360 to evaluate individual parts that contribute to the overall function of the orbital sander. We also evaluated system components and identified key limitations along with opportunities for improvement using insight from the teardown and outside sources. This process reflects a reverse engineering approach to gain a deeper understanding of how individual components interact and function as an integrated system.

Table of Contents

Introduction (AW) 3
System 1: Thermal/Fluid..... 6
Component 1: *Vents (BL)*..... 6
Component 2: *Vacuum Connector (BL)* 7
Vacuum Connector Drawing 8
Component 3: *Vacuum Skeleton (AW)*..... 9
Improvements (*AW AND BL)*: 11
System 2: Electromechanical (SKQ AND AS) 12
Component 1: *Stator (SKQ)*..... 13
Component 2: Motor (AS)..... 14
Component 3: *Circuit (SKQ)* 16
Armature Drawing 18
Electromechanical Improvement *(SKQ):*..... 19
System 3: Drivetrain (HRC AND CDZ)..... 20
Component 1: *Bearing Cartridge (HRC AND CDZ)*..... 20
Component 2: Eccentric Wheel (HRC) 23
Component 3: Sanding Pad (HRC)..... 25
Variation/Improvement*: (CDZ)* 26
Project Management (AS): 27
Project Management (AS)..... 28
Bibliography 29

Table of Figures

Figure 1: Outer Shell 6
Figure 2: Vacuum Connector 7
Figure 3: Vacuum Skeleton 9
Figure 4: Fan 10
Figure 5: interior shell View of Electronic Components 12
Figure 6: Stator 3D model 13
Figure 7: Full Assembly of Stator, Circuit, and Armature 14
Figure 8: Armature 15
Figure 9: Stator and Circuit 16
Figure 10: Shell View of Circuit 17
Figure 11: Upper 3D model view of circuit 17
Figure 12: Bearing Cartridge 21
Figure 13: Eccentric Wheel 24
Figure 14: Eccentric Wheel Fusion Model 24
Figure 15: Sanding Pad and Fusion Model 26
Figure 16: Gantt Chart 28

Introduction (AW)

This report shows the work done on an Inequalit orbital power sander to find out how the sander functions and what improvements could be made to the sander. Our group completely took apart the sander to figure out what each component's function is. The sander's main function is to grind down tough surfaces and make them smooth for different purposes. The function may seem simple, but it takes each system and component to accomplish their own task and work in unison to accomplish the simple task. The systems we identified in this report are thermal and fluid, drivetrain, and electromechanical systems. The three systems are expanded in the report below explaining their form, fit and function as well as an improvement for each system.

Functional Decomposition (*SKQ*):

The overarching purpose of a sander is to alter surfaces. However, this sander has various features that allow the user to alter surfaces in various ways and maintain a clear workspace. The sander utilizes a simple motor to spin its sander blade and fan blades to alter surfaces and collect the byproduct of the sanding, grinding, etching. With varying speed control, continuous wired power, and interchangeable sanding pads, this sander is highy customizable, cost effective, and efficient.

Functional Decomposition: *Tree (SKQ)*

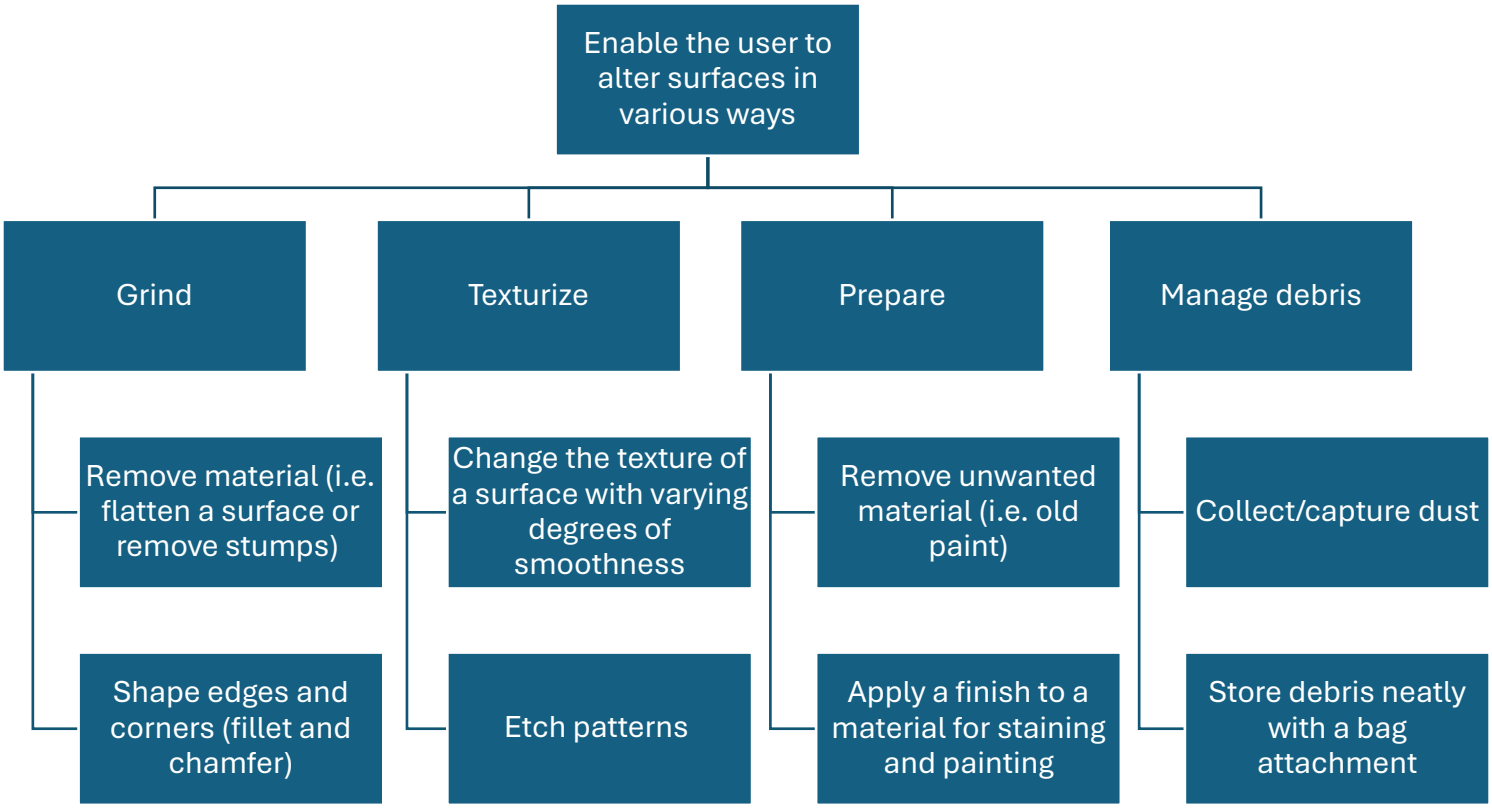

Functional Decomposition: ***Tabular (SKQ)***

#	Function	
F1	Alter Surfaces	The overarching purpose of the sander is to change the physical features of an object through different means
F1.1	Grind	
F.1.1.1	Remove	The user can completely delete features or make an object smaller by grating away at different surfaces.
F.1.1.2	Shape	The user isn't just limited to deleting features as the user can delete surfaces deliberately to generate a specific form of an object (i.e. rounding sharp edges into round spherical features).
F1.2	Texturize	
F.1.2.1	Smoothen	Rough surfaces can be made smoother to varying degrees.
F.1.2.2	Incise	Different patterns, surface features, or carvings can be made to insert
F1.3	Prepare	
F1.3.1	Clean	Surfaces can be removed from impurities, irregularities, or old layers.
F.1.3.2	Finish	Different sand paper grits can be used at different sanding speeds to create smooth surfaces ready to be painted or stained.
F1.4	Manage Debris	
F1.4.1	Vacuum	The sander features a vacuum that sucks up dust and particles that are uplifted from the surface subject to sanding.
F.1.4.2	Store	Some devices move loose particles out of the way, however the sander features a vacuum bag that collects the particles.
Constraints		
C1	Deficient	The sand is lacking in places with
C1.1	Short	The featured power cord may be too short for some applications.
C1.2	Weak	The Vacuum is not particularly effective at sucking up the dust and lacks the suction power required.

System 1: Thermal/Fluid

Component 1: ***Vents (BL)***

Figure 1: Outer Shell

Form:

Small openings in the plastic shell of the sander. Slight angles in how they are cut and are made with hard plastic. The hard plastic for the vents is the same hard plastic that is used for the rest of the shell.

Fit:

The vents are part of the shell of the sander. They are aligned with the motor and air flow of the machine to make it easier for air to flow out. They reside on the outside of the shell instead of inside like the rest of the components.

Function:

The function of the vents is to ensure the pressure and heat of the sander does not become excess. If dust does get in the ventilation system, it will immediately be rerouted to another system in the sander.

Component 2: *Vacuum Connector (BL)*

Form:

A hollow plastic cylinder with two notches at its top, segments with different radii that increase towards its base, and two small holes on the sides of the base. The form of the vacuum connector is a cylinder on top of a circle. The top part of the connector has a hole that goes all the way through it but does not keep the same diameter the entire way through.

Figure 2: Vacuum Connector

Fit:

The notches on the connector allow it to lock into place in the shell. The two holes in its base allow the vacuum skeleton to attach to the connector by inserting the rods into the holes.

Function:

The vacuum connector connects the shell to the vacuum. The connection creates an airtight seal between the components and allows the debris to be stored in the vacuum bag.

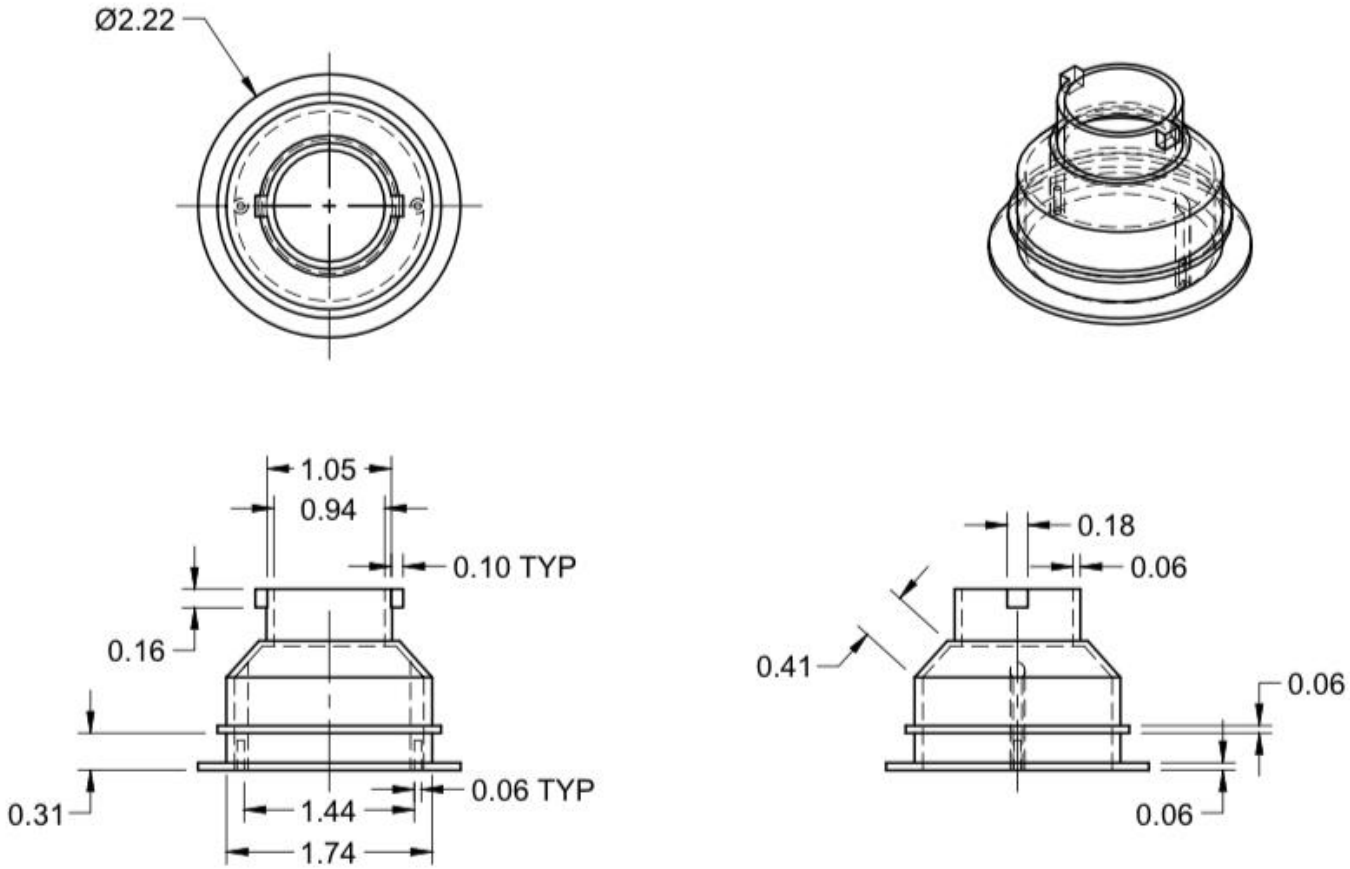

	PROJECT Reverse Engineering Report			
	TITLE Vacuum Connector Thermal/Fluid System			
APPROVED	SIZE	CODE	DWG NO	REV
CHECKED	A			
DRAWN Benjamin Levy 4/19/2026	SCALE 2:3 (From parent)	WEIGHT		SHEET 3/4

Component 3: *Vacuum Skeleton (AW)*

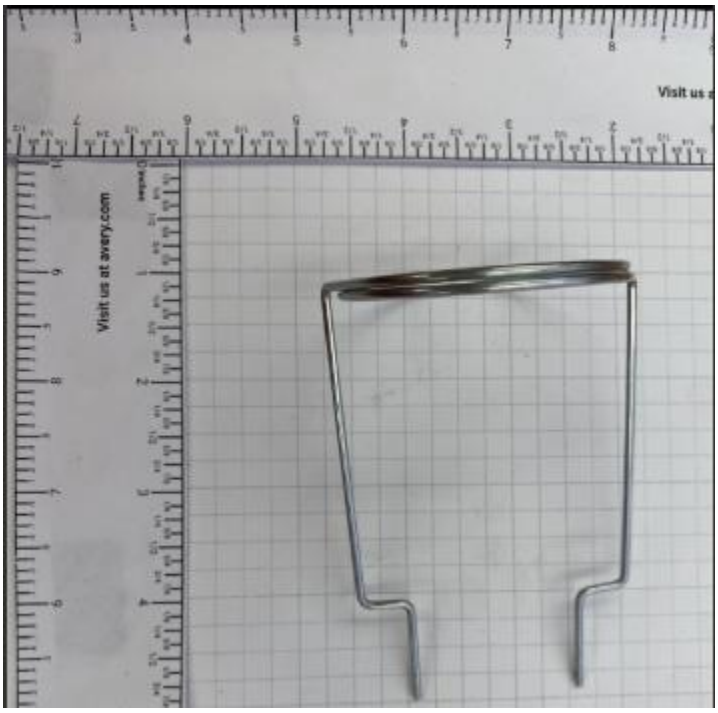

Figure 3: Vacuum Skeleton

Form:

The vacuum skeleton is a thin wire with a single coil as the base. The wire comes up from both ends which then bend inward and up again.

Fit:

The skeleton fits in the small holes in the base of the vacuum connector. The vacuum bag fits over the skeleton and the base of the connector.

Function:

The skeleton holds the vacuum bag open so that the space remains free for debris coming from the sander to fall into and caught.

Component 4: *Fan* (AW)

Figure 4: Fan

Form:

Fan has a top and bottom half with two different features. The top side has smooth blades that go from the center to the edge of the fan. There are six main blades with two shorter ones in between each of them. The blades are evenly and clearly spaced so they do not touch one another. The bottom side has eighteen of the shorter blades only around the edges and at a forty-five-degree angle.

Fit:

The fan is on the bottom half of the stator and the very bottom of the shell. It is between two vents. It is held in place by the washer on top of it while being assisted by the circular support at the bottom.

Function:

The function of the fan is to cool the system down, so it does not overheat and blow the excess hot air out of the vents beside the fan. The fan will spin because of the stator and push the air out with the blades on the top and bottom of the fan. The fan also assists in directing debris towards the vacuum bag.

Improvements (*AW AND BL)*:

The improvement will be making the vacuum skeleton a full hollow cylinder to replace the bag and skeleton. The skeleton is two wires connecting into the connector to put the vacuum bag over the skeleton. In its current state, as the bag collects debris from the sander, the debris starts to seep through the bag. There could also be an instance when the user decides to sand a durable surface and if it does, the debris could puncture the bag and spill the rest of the debris everywhere. The skeleton is made of aluminum, so the replacement cylinder should be made of aluminum because it is durable enough to catch whatever makes it into the vacuum and is extremely cheap. Aluminum wire usually costs $3.30 dollars a kilogram, so it would not be expensive to get the material. The aluminum would weigh less than 1 pound in this shape, so the weight would not be a problem for the sander.

System 2: Electromechanical (SKQ AND AS)

Arguably the most important system within the handheld sander is the Electromechanical system which primarily consists of a simple Universal Motor and a simple circuit (containing a switch, brushes, and rotary switch) that delivers power to the system. Universal motors are a cost effective and efficient way to generate motion in a device. Simply put, universal motors consist of two primary components, a stator and rotor (or armature); The armature has both electronic and magnetic features (Commutator, wire windings, and Core); these features react to the magnetic field and electric circuit that runs through the stator. By creating a magnetic field, the rotor can align with the field created by the stator and spin along its axis, thus converting electrical energy into magnetic energy, then into the rotational energy needed rotate the sander and vacuum blades.

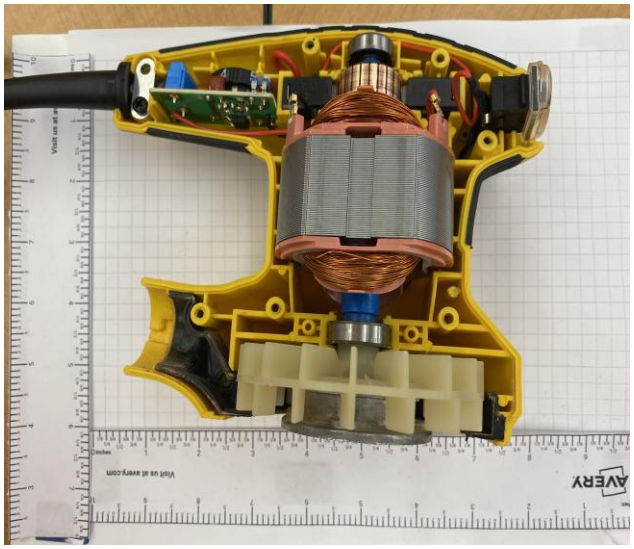

Figure 5: interior shell View of Electronic Components

Component 1: *Stator (SKQ)*

Form:

The stator is made of a steel core, red plastic, copper wiring, curved steel, and is elliptical in shape. It is hollow through its center, with curved magnets and plastic running along the inside, and has four terminals to run electrical wiring through on the upper plastic. Each of these physical features carries a specific functional feature. The steel core insulates and carries the magnetic field; the copper wire acts as magnetic field winding between the steel core and curved steel on the inside. The curved steel acts as strong electromagnets, and the plastic holds everything together.

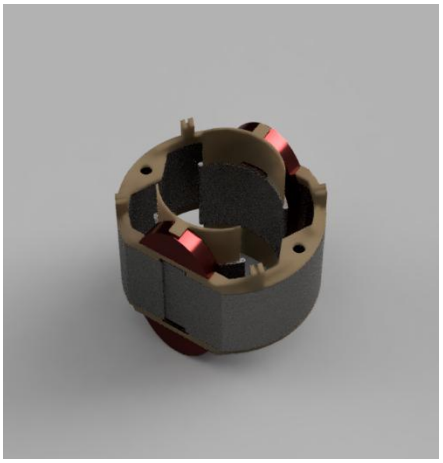

Figure 6: Stator 3D model

Fit:

The stator lies in the center of the sander shell, held in place by the shell and supporting framework. It itself is not held down and is easily removable (however the attached wiring is bolted down near the back end of the sander). It is the largest, heaviest component within the sander. It acts as the main terminal for each system (electronic, drivetrain, and fluid). The electrical circuit is through the stator by running wires at each terminal. The circuit components sit above the stator, and the rotor runs through the center of the stator without contact.

Function:

A stator generates electrical fields in which armatures and rotors can spin along; thus, generating the electromagnetic field that the rotor can convert into rotational energy. The Stator does this by running electric currents through its terminals, and further through its wound copper wire. The copper wire carries electric current which generates a magnetic field, which aligns the magnetic fields of the inner curved steel plates. These plates surround two sides of the rotor and create two, stationary, unchanging magnetic poles which the rotor can move/react along. The stator's electric terminals also allow for a circuit to run through the sander. The stator acts as vessel for which the rotor receives the power it needs to adjust its own current and magnetic field to produce its changing dipole to spin along the unchanging magnetic field produced by the electromagnetically curved steel plates.

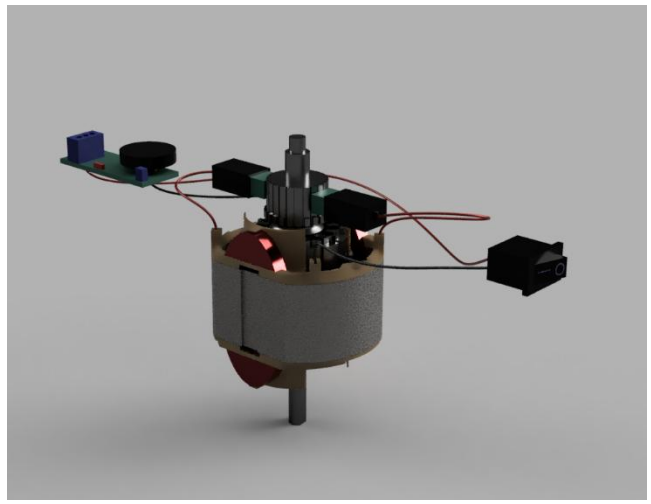

Figure 7: Full Assembly of Stator, Circuit, and Armature

Component 2: Motor (AS)

Form:

The motor found inside the sander is cylindrical in shape and is made up of different components that each have their individual functions. One component that can be found on the motor is the Commutator which is cylindrical in shape and is made of copper and is segmented. The next component that can be found is the Armature windings, which are a bundle of wires made from copper and are found in the center of the motor. Another part that can be seen is the Armature

core which surrounds the Armature windings. This component has red silicon pieces, and metal plating goes around the entire component. The motor also has a bottom and top shaft, with the bottom one being flat on one side and contains a screw hole, while the top one is completely round and does not contain a screw hole. Both sides are completely made of metal and are gray in color, and some parts of the shaft contain blue silicon around it.

Fit:

The motor fits inside the stator with a gap between them, so they are not fully touching, which allows the component to function. The shafts have mounting points inside of the sanders housing which allows for the motor to sit securely. Both shafts also contain bearings on both ends which allow for the motor to rotate easily. The Bottom shaft contains a screw hole, and this allows for the fan and main disk that to be securely attached to the motor

Figure 8: Armature

Function:

The main purpose of the motor is to convert the electrical energy it receives and convert it into mechanical energy as rotational motion. The different components of the motor help assist in this process. The Commutator takes the electric current and delivers it to the armature winding. What the Armature winding then does is create a north and south pole. As a result, the two poles are attracted to each other creating a magnetic field, and it also works together with the field windings of the stator which is the copper wiring found in the stator. What happens in this interaction is that the magnetic field of the rotor tries to align with the field of the stator which

results in the rotor in a way following the field of the stator. As a result, this creates a torque which is what makes the rotational motion. The armature core in this case is used to reduce any eddy current loss and heat buildup in the rotor. The metal on the core is in sheets rather than and as a result reduces heat. The rotor also has silicon steel, which also makes it harder for eddy currents to flow. The rotor also contains bearings on each shaft which allows for rotations.

Component 3: ***Circuit (SKQ)***

Form:

The circuit consists of three major parts, a switch, a rotary switch, and brushing. The circuit starts at the blue terminal located on the bread board with the rotary switch. Then it runs through the main switch, and lastly through the brushings. The components are primarily made of lightweight plastic and rubbers. The rotary switch and switch contain markings for power levels, and off-on options. The brushings are spring loaded with a graphite/carbon arm that extends to contact the rotor.

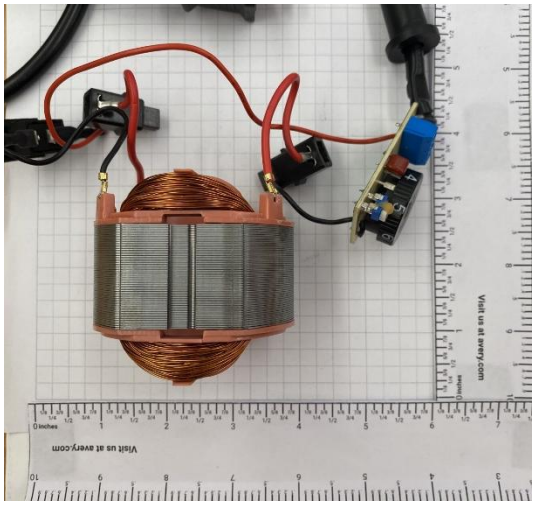

Figure 9: Stator and Circuit

Fit:

These components sit within the shell of the sander, above the other components along a secure framework, with the main board bolted in at the back end of the sander and the switch secured between the two shells at the front of the sander. The brushings are held in place on each side of the rotors (more specifically the commutator).

Figure 10: Shell View of Circuit

Function:

The primary purpose of the circuit is to carry the electric current to be used by the rotor and stator. Furthermore, it is to allow the user of the sander to decide the power level and state of the sander. By using a rotary switch the user can not only turn the sander on and off, but they can also control how much current/power runs through the circuit, and how much the brushes transfer to the commutator of the rotor. This controls how fast the rotor can spin and thus controls how fast the sand paper spins, allowing for more precise sanding, and different speeds for different applications

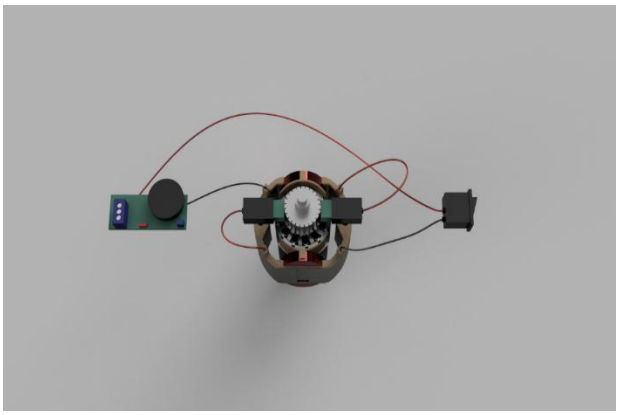

Figure 11: Upper 3D model view of circuit

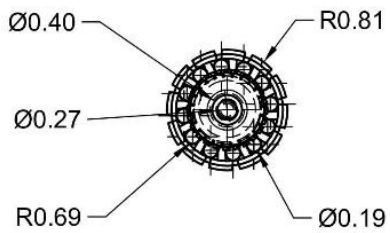

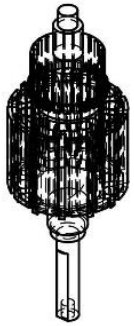

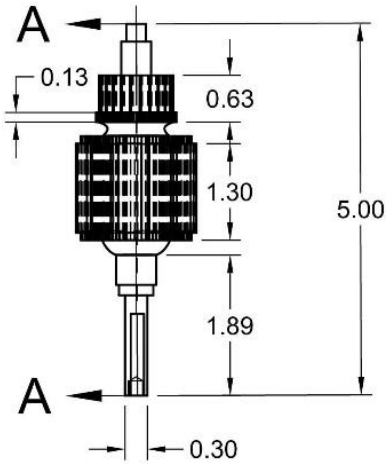

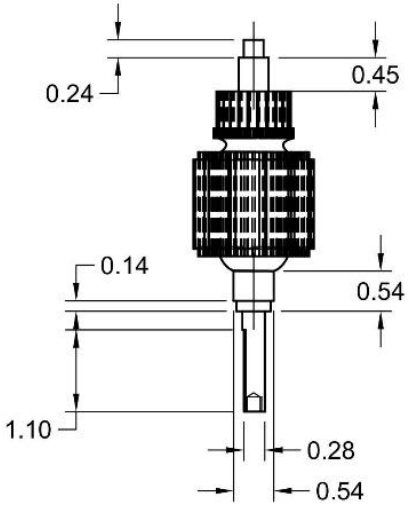

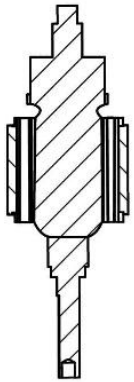

SECTION A-A
SCALE 1:2

LSU Department of Mechanical & Industrial Engineering	UNLESS OTHERWISE NOTED: DIMENSIONS ARE IN: INCHES TOLERANCES: x.x: ±0.1 x.xx: ±0.01 x.xxx: ±0.005	PROJECT Reverse Engineering Project			CLASS ME 1212
		TITLE Sander Rotor			MATERIAL <Material>
		SIZE A	CODE <Code>	DWG NO <DwgNo>	REV A
	DRAWN Andre Seoane 4/18/2026	SCALE 1:2	WEIGHT <Weight>	SHEET 1/1	

Electromechanical Improvement *(SKQ):*

A large issue presented in universal motors used in handheld tools is the weight. Stators and Armatures are usually made of cost effective but heavy materials such as steel or iron. However, when being applied to something like a sander, we sacrifice efficiency. A heavy stator can be optimal as it provides stability and balance in the sander. So, what can we change? It is in fact physically harder to spin heavier objects. We can effectively reduce inertia and increase the acceleration of the armature by changing the material of its axel and parent structure (i.e. what the commutator and core sit along). By replacing the axel with a lightweight metal or polymer we can reduce rotational inertia and thus increase rotational efficiency. Alternative materials could be aluminum, magnesium, titanium, or even some polymers. By choosing these materials we can accelerate the sander and vacuum blades, thus effectively strengthening the vacuum system which was originally weak. These materials are on average more expensive than steel or cast iron and can be harder to access. However, they can be justified due to the return on the performance. Change in the material isn't just the only choice, we can also change the form of the armature by adding waffling, which removes unnecessary weight, thus decreasing inertia as well. Another option is increasing the current flow in the sander by using slightly larger wires. Larger wires in the circuit allow for more current flow, and thus more current will flow to Armature, allowing faster acceleration, speed, and responsiveness. Which are all important for the sander, both for tool precsion and features like the vacuum, which has better suction with higher speed.

System 3: Drivetrain (HRC AND CDZ)

Component 1: *Bearing Cartridge (HRC AND CDZ)*

Form:

The bearing cartridge is a circular flange composed of steel, featuring a flat, round outer plate with multiple evenly spaced mounting holes around the perimeter, allowing it to be securely fastened to the sanders' housing. At the center, there is a circular opening that accommodates an eccentric wheel, serving as the interface for motion transfer. Surrounding this opening is an inner ring that provides structural support for the bearing. The bearing cartridge also contains raised metal sections that contribute to the balance of this component. The cartridge combines mounting structure and internal support into a single unit while allowing the eccentric wheel to rotate freely through its center.

Fit:

The bearing cartridge serves as a midpoint between the sander's motor and the Velcro disk that holds onto the sandpaper. The Velcro disk has four screws that go into the threaded holes in the bearing cartridge. The bearing cartridge also has an eccentric wheel sitting inside of it. The bearing cartridge and eccentric wheel are held in place through a screw that runs right down the middle and into the motor's bottom shaft. This allows the motor's rotational energy to be shared with the Velcro disk and results in the sanding of a surface.

Function:

The bearing cartridge functions as the mechanical transformation that defines the orbital sander's motion by converting the motor's rotational motion into eccentric orbital motion of the sanding pad while keeping the sanding motion stable and consistent to reduce wear on internal parts. It houses the spindle bearing, which provides a low friction interface for the rotating shaft, allowing the motor's high-speed input to be transmitted into the controlled orbital path followed by the sanding pad. It's built in eccentric wheel shifts the axis of rotation slightly off center, to create a small circular orbit of the sanding pad. Simultaneously, the bearing supports both side to side and up and down forces during sanding to help keep the motion of the orbital sander controlled.

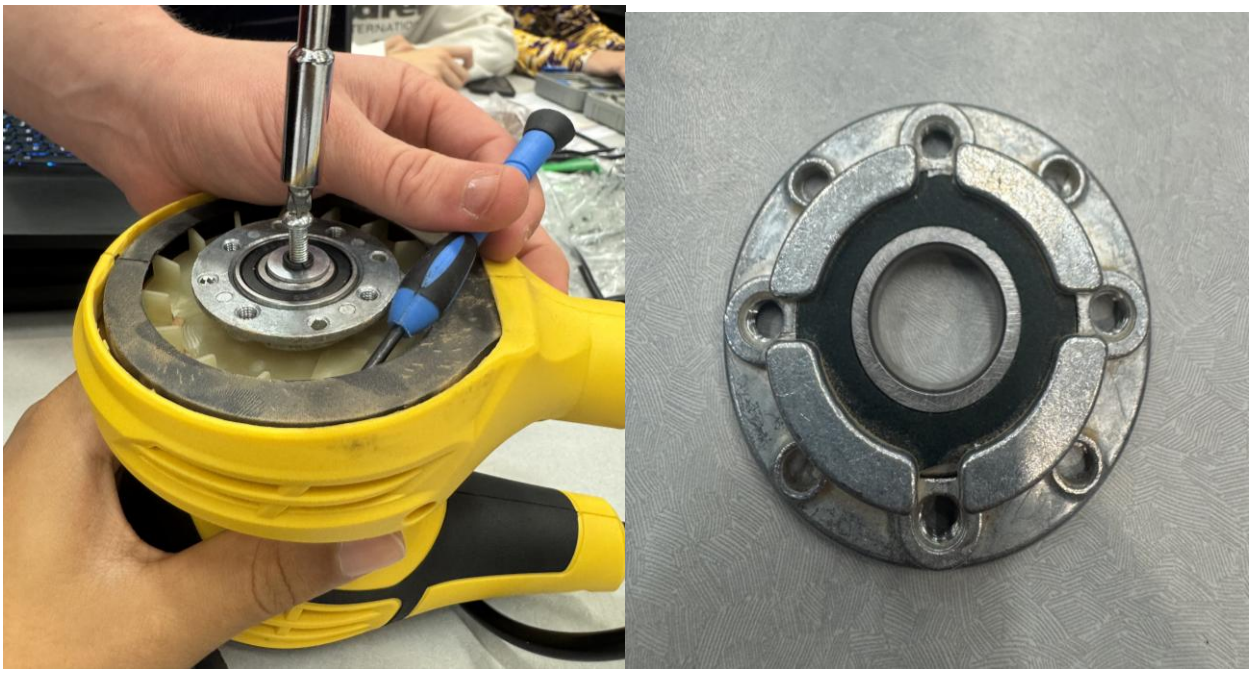

Figure 12: Bearing Cartridge

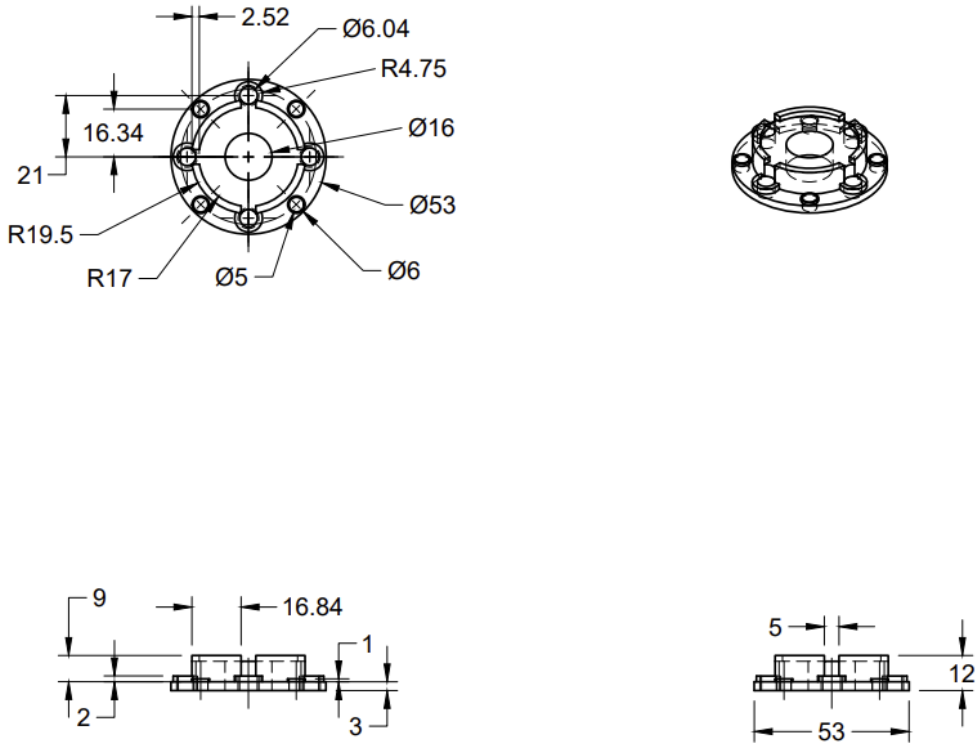

	PROJECT ME1212_S26_002			
	TITLE REP - Bearing Cartridge			
APPROVED	SIZE	CODE	DWG NO	REV
CHECKED	A			
DRAWN Cedrick Ziegler 4/18/2026	SCALE 1:2	WEIGHT	SHEET 1/1	

Component 2: Eccentric Wheel (HRC)

Form:

The form of the eccentric wheel can be defined as a metal with an asymmetrical geometry, in which it has an off center bore that creates the necessary displacement for the orbital motion of the sander. One side of the wheel contains a D-shaped hole that engages with the motor shaft, while the opposite side includes a rounded neck designed to fit into the bearing cartridge. The eccentric wheel has a smooth surface and tight dimensions to support high speed rotation and minimize vibration when the orbital sander is being operated.

Fit:

In terms of fit, the eccentric wheel links the motor to the bearing cartridge using its D-shaped hole to form a connection that forces the wheel to rotate in correspondence to the motor. On the same shaft, the cooling fan is also connected to form a single rotating assembly as the wheel spins. The wheel sits between the bearing cartridge, enabling the bearing to follow the eccentric path instead of spinning perfectly in place to create the orbital sanding movement. All the parts are tightly fitted to ensure that nothing collides during high-speed rotation, which maintains airflow and consistent orbital motion.

Function:

The primary function of the eccentric wheel is to convert the motor's spinning motion into an orbital movement of the sanding pad. Because the hole in the wheel is off center, when the motor spins the eccentric wheel, it creates a shifting motion opposed to a perfectly circular rotation to prevent the sanding pad from just spinning in place. The motion produced by the wheel contributes to producing a smoother and even finishes by distributing the sanding action more

evenly. Operating alongside the bearing cartridge and pad assembly, the eccentric wheel controls the orbit size, contributes to the vibration, and ultimately defines the sanding performance of the orbital sander.

Figure 13: Eccentric Wheel

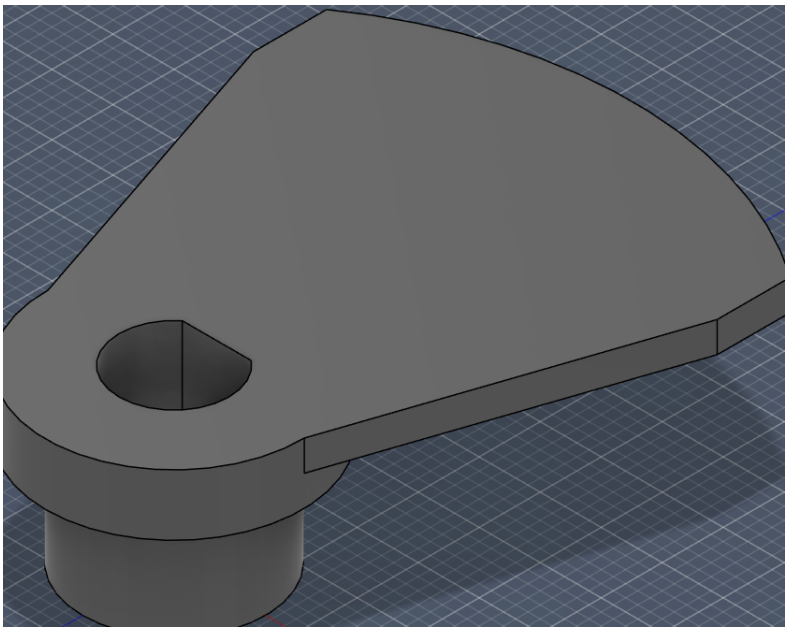

Figure 14: Eccentric Wheel Fusion Model

Component 3: Sanding Pad (HRC)

Form:

The sanding pad is a thin, circular component of the orbital sander consisting of a hard plastic topped with foam and a Velcro surface layer that can be attached to the sanding disk. The pad contains a total of twelve spaced out holes arranged around its center, in which the eight larger holes are near the outer edge and four smaller screw holes are positioned closer to the middle. The overall design of the sanding pad is symmetrical, thin, and precise to align with the sander's disk and housing.

Fit:

The sanding pad is the component on the sander that serves as the layer between the bearing cartridge and the sanding disk, serving as the central interface that connects the drive components to the abrasive layer. It attaches the bearing cartridge through the four screws centered around the middle of the sanding pad, aligning with the eccentric wheel to maintain balanced rotation. The pad's Velcro surface connects with the sanding disk, while the ventilation holes align with those of the disk to allow continuous airflow.

Function:

The sanding pad receives orbital motion and transfers this motion to the sanding disk through a stable backing surface using a Velcro system. This allows the disk to perform as a sanding tool by grinding down on rough surfaces and smoothing the area while remaining properly aligned. Additionally, the holes allow dust to be extracted through the pad to reduce the buildup of

sawdust and increase sanding efficiency. The sanding pad also assists in distributing pressure evenly, reducing vibration, and providing structural support in translating motor driven motion into controlled sanding.

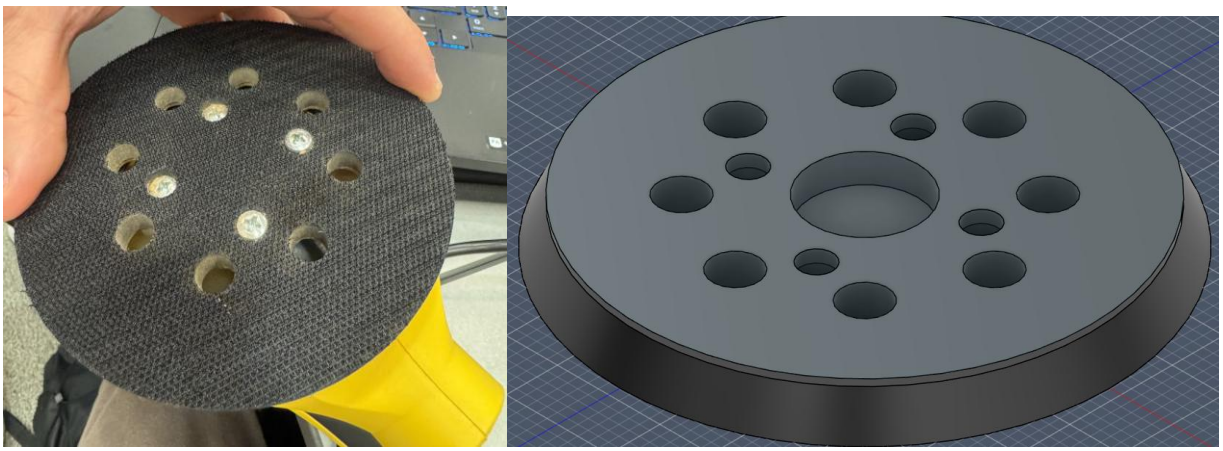

Figure 15: Sanding Pad and Fusion Model

Variation/Improvement*: (CDZ)*

One improvement we can make to the drivetrain is switching out a vertical motor to a pancake style one. This new motor would be mounted directly above the bearing cartridge and Velcro disk. This would involve fewer moving parts resulting in less vibration, friction, and reduced energy loss due to everything being more closely connected. In addition, with most of the weight being at the bottom of the sander, the center of gravity would be lowered, allowing for more control over the sander. This improvement would result in a better overall sander and provide a more comfortable experience for the user.

Project Management (AS):

The project management process was straightforward as we started with the creation of the Team contact. Each member was given their own role to help progress the project (Sebastian Qaisieh: Project Lead, Andre Seoane: Facilitator, Benjamin Levy: Fusion Lead, Cedrick Ziegler: Photographer, Hailey Crume: Workload coordinator). We decided to divide the work into a way that would be most efficient, which was dividing the task up so that multiple tasks could be done at the same time. The way we organized the work is we completed all our needed tasks and gather the information we needed individually then put it together for the final report. We had weekly meetings on either Saturday or Sunday depending on the team's availability, and we used these meetings to track progress and discuss any issues that arose during the week. An issue that came up during the process of the project is that some of our initial deadlines needed to be pushed back because we did not anticipate that they would take up as much time. Our fusion design for the stator and circuits took up more time as we underestimated the complexity of these parts. The Report itself was also pushed back as we initially wanted to have it completed on 4/17. However, due to other deadline changes, we had to push it back to 4/19. Overall, the project went well turning out as expected.

Project Management (AS)

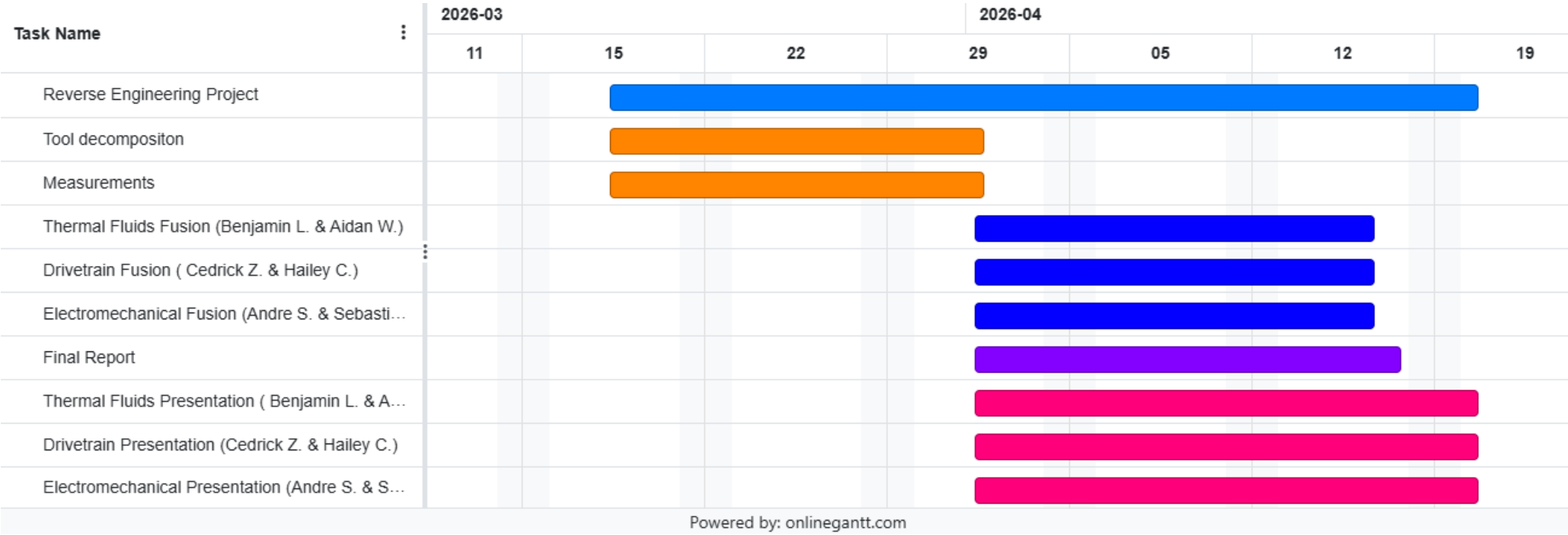

Figure 16: Gantt Chart

Bibliography

Daily Metal Price. "Daily Metal Price: Aluminum Price (USD / Pound) for the Last Year." *Daily Metal Price* , www.dailymetalprice.com/metalpricecharts.php?c=al&u=lb&d=240. Accessed 20 Apr. 2026.

BYJU'S. "Universal Motor." *BYJUS*, BYJU'S, 3 Feb. 2023, byjus.com/physics/universal-motor/.

Monsterio, The Great. "The Axial Flux Motor: A Guide to Pancake Power." *VoltsMonster*, VoltsMonster, 30 Dec. 2025, www.voltsmonster.com/the-axial-flux-motor-a-guide-to-pancake-power.

Ahmed, Rakin. "Aluminum: Properties, Uses and Why It's so Widely Used." *Metal Supermarkets*, Metal Supermarkets, 8 July 2025, www.metalsupermarkets.com/aluminum-properties-uses-and-why-its-so-widely-used/.